BB04SS

Barrel Bolt 4"
Stainless Steel, Black Powder Coated

LYNN COVE FOUNDRY & FORGE
Info@LynnCove.com | (800) 975-7089

SCALE: 1:2

Do not scale drawing. All dimensions are nominal (+/- 1/8") and for reference only. Specifications and dimensions are subject to change without notice. 3/28/2016

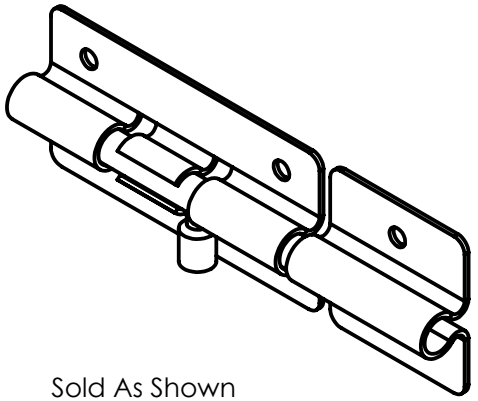

Sold As Shown

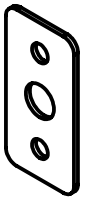

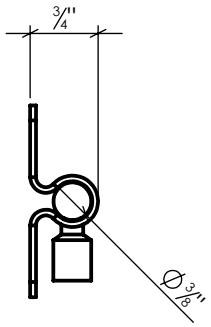

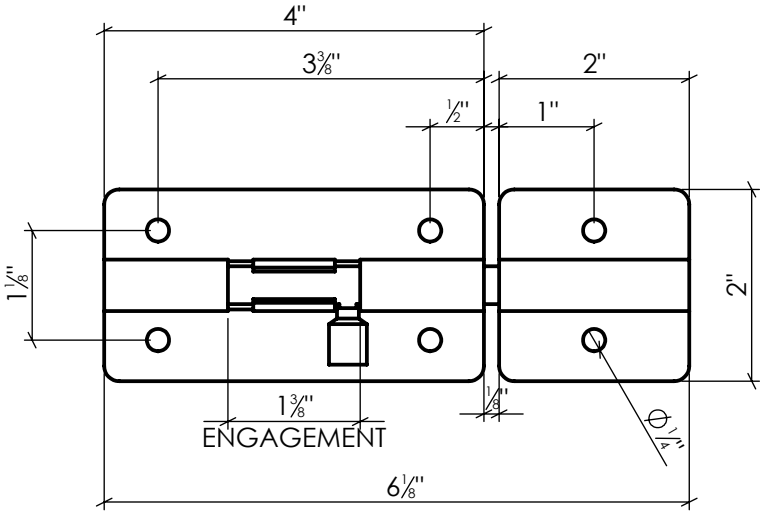

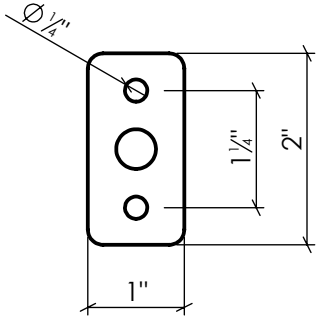

Mortise Receiver