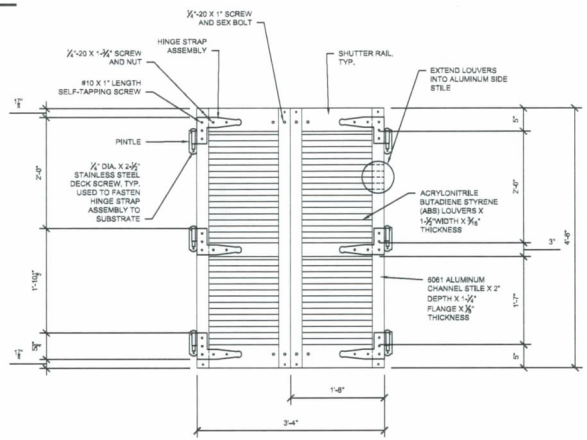

SHUTTER EXTERIOR ELEVATION (LOUVERED)

SCALE: 1"=1'-0"

NOTES
- THIS SHUTTER IS PROTECTED BY U.S. PATENT 7,036,286
- OTHER PATENTS ARE PENDING
- MAXIMUM TESTED SIZE: 40" WIDTH X 120" LENGTH
- MAXIMUM TEST PRESSURE (DESIGN PRESSURE): 63 PSF

THESE ASSEMBLIES HAVE BEEN TESTED IN ACCORDANCE WITH AND CERTIFIED BY HURRICANE TESTING LABS, INC. TO MEET THE FOLLOWING CODES & STANDARDS:
- ASTM E330
- ASTM E1886
- ASTM E1996

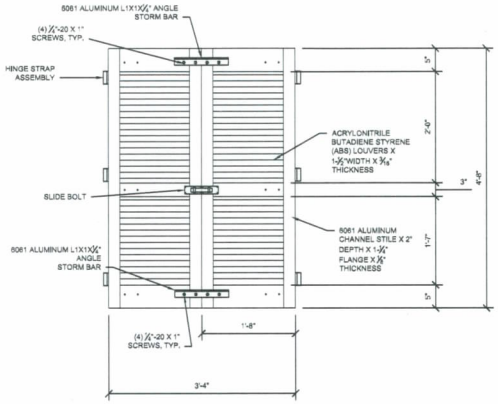

SHUTTER INTERIOR ELEVATION (LOUVERED)

SCALE: 1"=1'-0"

NOTES
- THIS SHUTTER IS PROTECTED BY U.S. PATENT 7,036,286
- OTHER PATENTS ARE PENDING
- MAXIMUM TESTED SIZE: 40" WIDTH X 120" LENGTH
- MAXIMUM TEST PRESSURE (DESIGN PRESSURE): 63 PSF

THESE ASSEMBLIES HAVE BEEN TESTED IN ACCORDANCE WITH AND CERTIFIED BY HURRICANE TESTING LABS, INC. TO MEET THE FOLLOWING CODES & STANDARDS:
- ASTM E330
- ASTM E1886
- ASTM E1996

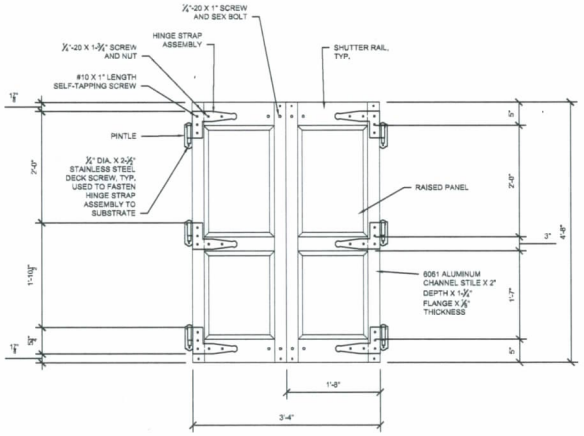

SHUTTER EXTERIOR ELEVATION (RAISED PANEL)

SCALE: 1"=1'-0"

NOTES
- THIS SHUTTER IS PROTECTED BY U.S. PATENT 7,036,286
- OTHER PATENTS ARE PENDING
- MAXIMUM TESTED SIZE: 40" WIDTH X 120" LENGTH
- MAXIMUM TEST PRESSURE (DESIGN PRESSURE): 63 PSF

THESE ASSEMBLIES HAVE BEEN TESTED IN ACCORDANCE WITH AND CERTIFIED BY HURRICANE TESTING LABS, INC. TO MEET THE FOLLOWING CODES & STANDARDS:
- ASTM E330
- ASTM E1886
- ASTM E1996

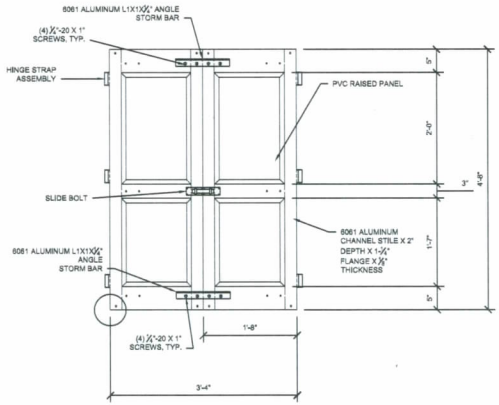

SHUTTER INTERIOR ELEVATION (RAISED PANEL)

SCALE: 1"=1'-0"

NOTES
- THIS SHUTTER IS PROTECTED BY U.S. PATENT 7,036,286
- OTHER PATENTS ARE PENDING
- MAXIMUM TESTED SIZE: 40" WIDTH X 120" LENGTH
- MAXIMUM TEST PRESSURE (DESIGN PRESSURE): 63 PSF

THESE ASSEMBLIES HAVE BEEN TESTED IN ACCORDANCE WITH AND CERTIFIED BY HURRICANE TESTING LABS, INC. TO MEET THE FOLLOWING CODES & STANDARDS:
- ASTM E330
- ASTM E1886
- ASTM E1996

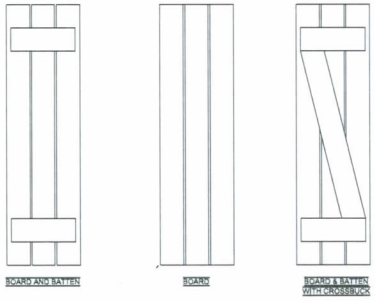

ALTERNATE SHUTTER STYLES

SCALE: NO SCALE